Accessory

OptoLink

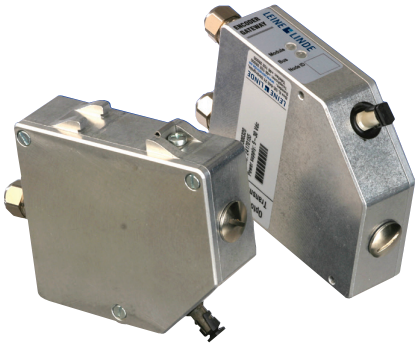

OptoLink

- System for transmission of incremental encoder signals in an optical fibre
- Typical areas of use:
  – In environments with high electromagnetic disturbances
  – Transmission of signals over long distances
  – Where galvanic insulation is required

CE

Electrical specification

Transmitter

Supply voltage +EV	9-30 Vdc, polarity protected
Current consumption excl. encoder	Max 2 W
Startup delay	10 ms
Encoder connection	HTL Power supply: Same as +EV, Input frequency range: 0 .. 200 kHz, Input load: 2,4 k Ohm
Fibre (not included)	62,5 µm, multimode Max length: 2700 m, Connectors: ST-type

Receiver

Supply voltage +EV	9-30 Vdc, polarity protected
Current consumption without load	Max 2 W
Startup delay	10 ms
Outputs	HTL, short circuit protected
Load max	± 40 mA
Max cable length	200 m @ 50 kHz
U_{high} (at 10 mA load)	> +EV -2,0 Vdc
U_{low} (at 10 mA load)	< 1,15 Vdc
Frequency range	0 .. 200 kHz
Propagation delay from input in Transmitter	3 µs excluded delay in fibre (delay in 1 km fibre: 5 µs)

Mechanical specification

Housing	Aluminium
Weight	Approx. 400 g
Protection class	IP 65 according to IEC 60529
Temperature	-20 °C .. +85 °C
LED indication	Module and Bus
Connection fibre	62,5 µm ST-type
Connection encoder	Screw terminal

Accessories

Fibre to OptoLink system, free length	Contact Leine & Linde
Encoders	See datasheet for encoders

OptoLink

Dimensions

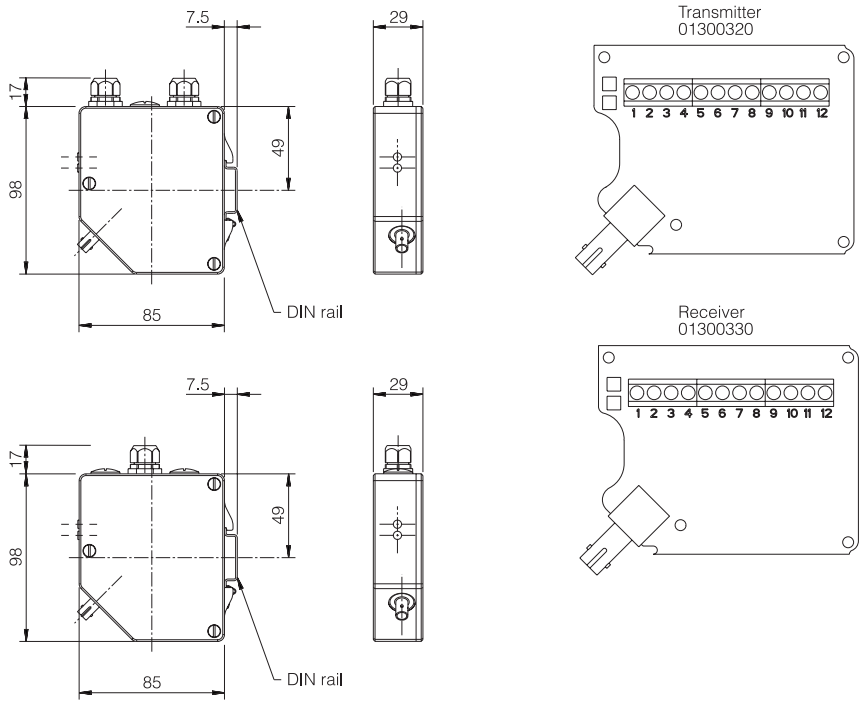

System description

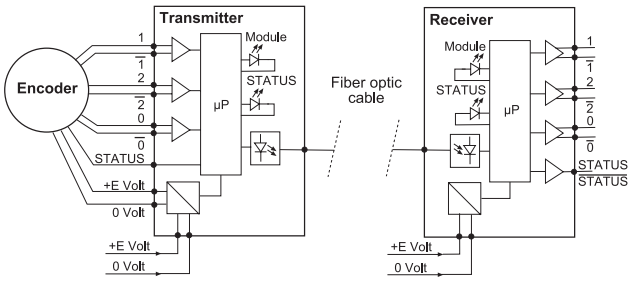

Pin configuration

Transmitter		Receiver		
Function	**Terminal**	**Function**	**Terminal**	**Cable**
+EV (Encoder supply)	1	+EV	1	Red
0 V (Encoder supply)	2	0 V	2	Blue
1 (S90)	3	1 (S90)	3	Yellow
$\overline{1}$ (S90/)	4	$\overline{1}$ (S90/)	4	Black
2 (S00)	5	2 (S00)	5	Green
$\overline{2}$ (S00/)	6	$\overline{2}$ (S00/)	6	White
0 (Sref)	7	0 (Sref)	7	Brown
$\overline{0}$ (Sref/)	8	$\overline{0}$ (Sref/)	8	Violett
STATUS	9	STATUS	9	
+EV (Supply)	11	$\overline{\text{STATUS}}$	10	
0 V (Supply)	12			

Ordering information

Available models		Part no.
CRG OptoLink Transmitter	9-30 Vdc supply, HTL input	01300320
CRG OptoLink Receiver	9-30 Vdc supply, HTL output	01300330
CRG OptoLink Receiver	9-30 Vdc supply, HTL output, pre-mounted 1,5 m cable	01300331
CRG OptoLink Receiver	9-30 Vdc supply, RS-422 output	01300332

6 February 2012. Specifications can be changed without prior notice.